TSFM

Mono Pump

TSF Pump AB
Skepparegatan 10
311 73 Falkenberg
Sweden

Phone Englis/Scandinavian: +36 736 730013
Phone Hungarian: +36 30 2256 788
E-mail: info@tsfpump.com

TSF PUMP AB

About.

1.Wide flow and pressure range: maximum flow up to 400m /h, conventional pressure up to 4.8mpa, special design pressure up to 10MPa.

2.High viscosity is up to 1000000 cm.

3.The maximum suction is up to 7.5 meters.

4.The surface roughness of stator and stator core die has reached 0.4, which is the highest level in the industry, ensuring the surface roughness and reducing friction.

TSF PUMP AB

Design.

1. Sealing.
2. Cardan Joint.
3. Flange suction.
4. Rotors.
5. Suction casing.
6. Bearings .
7. Heavy duty bearings.
8. Flange support.
9. Stator.
10. Connect pole.
11. Shaft.
12. Shaft connection.
13. Suction chamber.
14. Flange discharge.
15. Replace chamber.
16. Support.

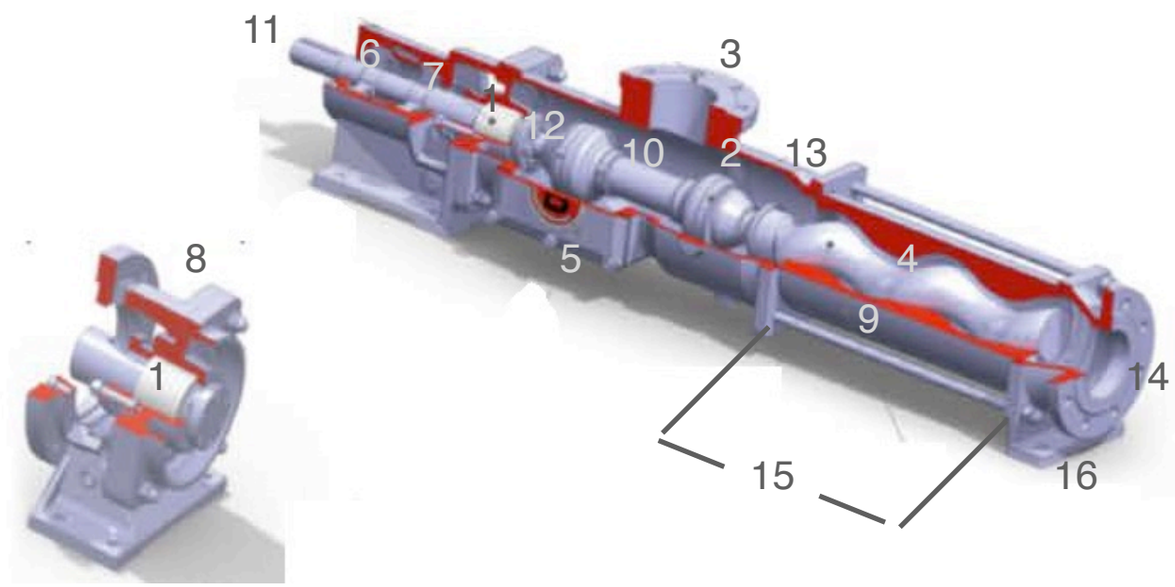

TSF PUMP AB

.

Types .

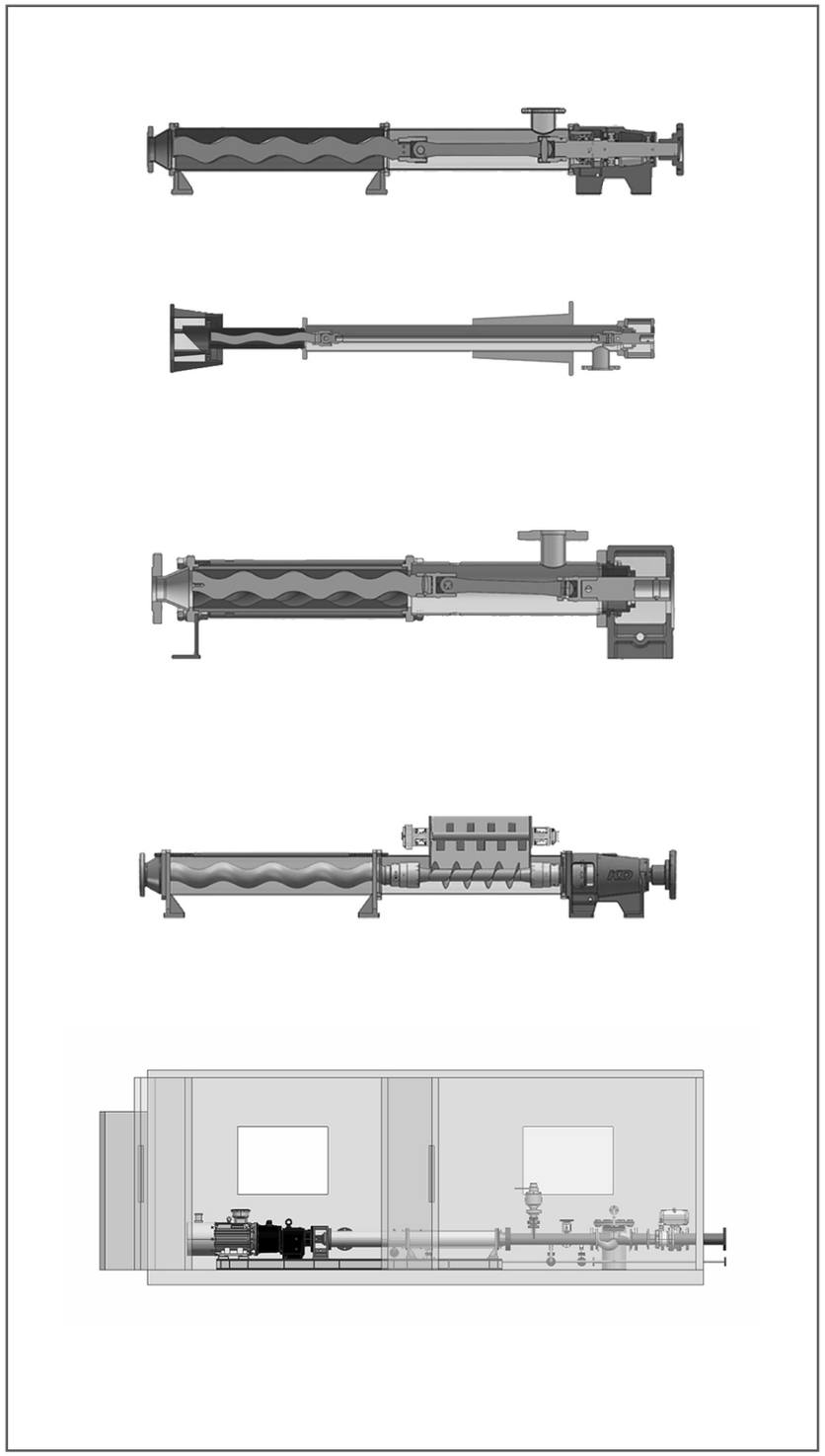

TSF PUMP AB

Material Combinations:

Material Combinations	Rotor.	Stator.	Flow passage compnents.
1	40Cr	NBR	40Cr/45
2	1Cr18Ni9Ti	NBR	1Cr18Ni9Ti/ SIS233
3	SIS2333	Food rubber	SIS2333
4	SIS2333	EPDM	SIS2333
5	1Cr18Ni9Ti	EPDM	1Cr18Ni9Ti/ SIS233
6	45	FBR	45
7	1Cr18Ni9Ti	FBR	1Cr18Ni9Ti/ SIS233
8	2Cr13	NBR	1Cr18Ni9Ti/ 2Cr13
9	SIS2343	NBR	SIS2343/ SIS2333
10	S31803	FBR	S31803/ SIS2343

SIS2333 = AISI 304, EN 1.4301
SIS2343 = AISI 316 L, EN 1.4404

TSF PUMP AB

Parameter table 0.6 MPa +

M Serie	100rpm Qth (m³/h)	Speed(max) (rpm)	Flow (m³/h)	Shaft power (Kw)	Ordinary speed (rpm)	Flow (m³/h)	Shaft power (Kw)
102	0.11	2200	1.7	0.7	1450	1.1	0.5
103	0.32	1650	3.7	1.6	1100	2.4	1.1
104	0.93	1050	7	2.5	700	4.5	1.7
107	2.62	750	14	5.1	550	10	3.8
108	4.35	650	20.9	7.2	450	14.1	5
110	7.38	550	30.1	10.3	400	21.3	7.5
112	12.26	450	43.1	13.9	300	28	9.3
115	20.61	350	56.3	18.1	250	39.2	13
118	34.62	300	81	26.1	200	52.6	17.5
121	57.99	250	118.9	34.7	180	82.5	23.6
125	97.64	225	180.2	48.9	160	123.4	35.6
129	166.11	200	272.4	72.8	140	183.7	50.2
130	257.02	175	368.9	96.6	120	243.7	62.5

TSF PUMP AB

Parameter table 1.2 MPa +

M Serie	100rpm Qth（m³/h）	Speed(max) (rpm)	Flow（m³/h）	Shaft power（Kw）	Ordinary speed (rpm)	Flow（m³/h）	Shaft power（Kw）
102	0.06	2200	0.9	0.6	1450	0.6	0.4
103	0.16	1600	1.9	1.2	1100	1.2	0.8
104	0.46	1050	3.5	2.2	700	2.2	1.4
107	1.31	750	7.3	3.9	550	5.1	2.8
108	2.2	650	10.6	5.6	450	6.9	3.8
110	3.69	550	16.1	8	400	10.6	5.5
112	6.23	450	22.2	11	300	13.5	6.9
115	10.44	350	28.9	14.4	250	18.8	9.6
118	17.54	300	43.2	20.3	200	26.7	12.9
121	29.41	250	60.3	28.3	180	40.3	19.4
125	49.49	225	94.7	42.1	160	62.6	28.6
129	83.05	200	141.2	62.8	140	91.9	41.9
130	128.5	175	191.2	85	120	121.8	55.6

TSF PUMP AB

Medium table

Abrasiveness	Medium	Revolving speed
No	Water, lubricating oil, soapy water, blood, glycerin, etc.	400-1000(rpm)
Ordinary	Heavy oil, municipal sewage, mud, suspension, industrial wastewater, paint pigment, paper pulp, mortar, food seasoning products, etc.	200-400(rpm)
Serious	Super heavy oil, limestone cement slurry, clay, clay, coal water slurry, dehydrated sludge, glass glue, catalyst slurry, etc.	50-200(rpm)

TSF PUMP AB

Application:

- Energy and Environment
- Water and waste water Treatment Pulp and Paper
- Mining and Minerals
- Chemical/Biochemical Industry
- Oil and Gas
- Dyeing industry
- Food, brewery and beverage Industry Agriculture industry and solutions Sugar Industry
- Wood Processing
- Construction industry
- Other industrial solutions

Features:

1.Wide flow and pressure range: maximum flow up to 400m /h, conventional pressure up to 4.8mpa, special design pressure up to 10MPa
2.High viscosity is up to 1000000 cm.
3.The maximum suction is up to 7.5 meters.
4.The surface roughness of stator and stator core die has reached 0.4, which is the highest level in the industry, ensuring the surface roughness and reducing friction.